Téléchargé sur www.lampe-videoprojecteur.info

LitePro® 560/570

LCD PROJECTOR

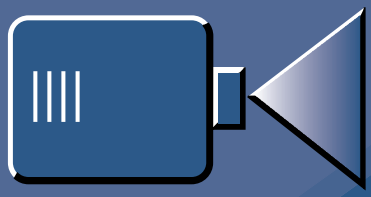

USER'S GUIDE

InFocus® SYSTEMS

Great ideas. Brought to light.

LitePro 560/570

QUICK START

fold and tear here

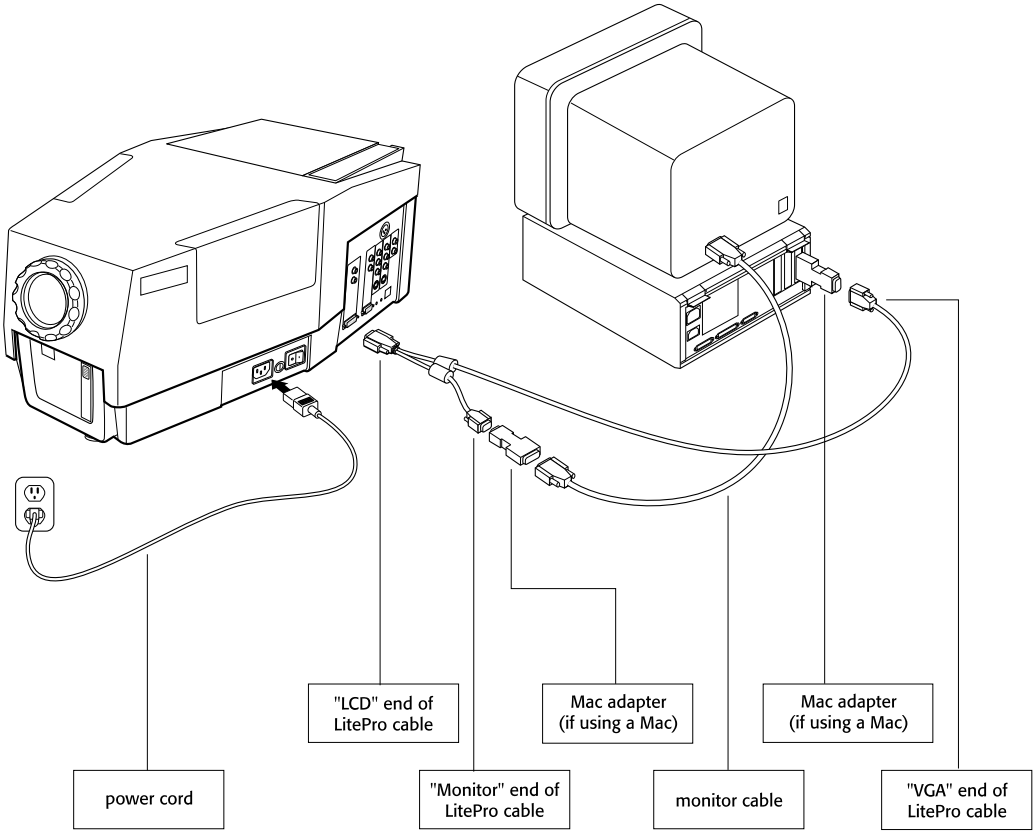

fold and tear here

Connecting the LitePro is summarized on the back of this card and described in detail in the *LitePro 560/570 User's Guide*.

The User's Guide contains instructions and illustrations for connections to all compatible computers. It also describes the remote control buttons and menu functions.

InFocus® SYSTEMS
Great ideas. Brought to light.™

LitePro

QUICK START

1 **You must install the projection bulbs the first time you use the LitePro.** Refer to the "Read Me First" card or page 40 of the User's Guide for instructions.

2 Place the LitePro on a flat surface within six feet of your power source and your computer.

3 Remove the lens cover.

4 Plug in the LitePro's power cord.

5 Make sure your computer and monitor are turned off.

6 Plug the "LCD" end of the LitePro cable into the "COMPUTER" connector on the side of the LitePro.

If your computer is a Macintosh, attach the Mac adapters before doing step 8. Attach one adapter to the "VGA" end of the LitePro cable. Attach the other adapter to the "MONITOR" end of the LitePro cable.

7 Locate your computer's monitor cable. Unplug it at the computer end, leaving the monitor end attached.

8 Connect the LitePro cable to the monitor connector on your computer.

If you want to display your presentation on your computer's monitor as well as on the projection screen, attach the "MONITOR" end of the LitePro cable to the end of the monitor's cable.

9 **LP570 only:** If you want to connect your computer's sound board, a video player, a speaker system, a microphone, or a second computer, refer to the instructions in User's Guide.

10 If you attached your monitor in Step 8, turn on the monitor.

11 Press the "|" side of the power switch to power up the LitePro. The test pattern will be projected onto the screen. If necessary, adjust the height of the LitePro and focus the lens.

12 Turn on your computer. The computer image will be projected onto the screen.

If your computer is...	You'll need...
IBM-compatible desktop or laptop	no adapters
Apple Macintosh or PowerBook	2 Mac adapters 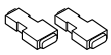
Macintosh PowerBook	1 Mac adapter and your video-out cable 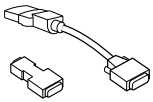

InFocus® SYSTEMS
Great ideas. Brought to light.™

Copyright © 1995 by In Focus Systems, Inc.
Wilsonville, Oregon. All rights reserved.

Certifications

UL 1950, CSA 950, EN 55022, EN 50082-1, EN 60950

FCC Warning

This equipment has been tested and found to comply with the limits for a Class A digital device, pursuant to Part 15 of the FCC Rules. These limits are designed to provide reasonable protection against harmful interference when the equipment is operated in a commercial environment.

Instructions to User

This equipment generates, uses and can radiate radio frequency energy and, if not installed and used in accordance with the instructions in this manual, may cause harmful interference to radio and television reception. Operation of this equipment in a residential area is likely to cause harmful interference. If this equipment does cause interference to radio or television reception, the user is required to correct the interference at his/her own expense. The user may try to correct the interference by one or more of the following measures:

- Reorient the receiving antenna for the radio or television.
- Relocate the equipment with respect to the receiver.
- Plug the equipment into a different outlet so the equipment and receiver are on different branch circuits.
- Fasten cables using mounting screws to ensure adequate electromagnetic interference controls.

EN 55022 Warning

This product is intended for use in a commercial, industrial, or educational environment. It is not intended for residential use.

This is a Class A product. In a domestic environment it may cause radio interference, in which case the user may be required to take adequate measures. The typical use is in a conference room, meeting room or auditorium.

Wenn das Produkt Lite Pro 560/570 in Deutschland verkauft wird, muss es Umwelt geschuetzt sein. (Klasse B) Dieses Product muss mit dem Bundesamt fuer Post und Telekommunikation registriert sein. (BAPT)

Trademarks

All trademarks are the property of their respective owners and are used in this publication for identification purposes only.

The following are trademarks or registered trademarks of their respective companies:

- IBM and PS/2: International Business Machines, Inc.
- Apple, Macintosh, Mac II, LC, PowerBook, Quadra, Performa, and Power Mac: Apple Computer Corp.
- LitePro, LiteShow, and IN FOCUS SYSTEMS: In Focus Systems, Inc.

Declaration of Conformity

We, In Focus Systems, Inc., 27700B SW Parkway Ave. Wilsonville, Oregon 97070 USA, declare under our sole responsibility that the:

LitePro 560 and LitePro 560LS LCD projector
LitePro 570 and LitePro 570LS LCD projector

to which this declaration relates, are in conformity with the following standards:

EN 55022. . . . . .Information Technology Equipment Emission Standard
EN 50082-1 . . . . . .Generic Immunity Standard
EN 60950: 1992+A1+A2: 1993 .Safety of Information Technology Equipment

following the provisions of the following directives:

EMC Directive 89/336/EEC, Amended by 93/68/EEC
Low Voltage Directive 72/23/EEC, Amended by 93/68/EEC

European Office
Planetenweg 91, 2132 HL Hoofddorp, The Netherlands

September, 1995

Contents

Safety Summary iii

Introduction 1
Compatibility 2
Cables and Adapters 2
Remote Control Programmer Kit 3
Usage Guidelines 3
If You Need Assistance 3

Setting Up the LitePro 5

Using the LitePro 17
Basic Image Adjustment 17
Turning the LitePro Off 17
Using the Remote Control 17
Focusing the Image 18
Adjusting the Height 18
Switching to the Spare Lamp 19
Using the Remote Control Buttons 20
Using the Menus 24
Menu 1 Functions 26
Menu 2 Functions 28
Audio Menu Functions 36

Maintenance 39
Cleaning the Lens 39
Replacing the Projection Lamps 40
Replacing Batteries in the Remote Control 42
Replacing the Fuse 43

Troubleshooting 47
Before You Call for Assistance 47
Solutions to Common Problems 48

Appendix 51
Specifications 51
Accessories 53
Cable Connector Pin Assignments 54
Laptop Display Activation Chart 56

Index 59

Safety Summary

Please read these instructions before using your LitePro projector. Failure to comply with these instructions could result in fire, electrical shock, personal injury or equipment damage.

These graphics are used throughout this manual to draw your attention to important information about the LitePro:

Note Information that may be unusual or unexpected.

Caution Information that helps you avoid damage to your equipment.

Warning Information that helps you avoid personal injury.

These graphics are used on the LitePro:

Attention - Refer to the User's Guide for important safety information.

Fuse - Refer to "Replacing the Fuse" on page 43 of this User's Guide for important safety information.

Hot Surface - Do not touch until the LitePro has cooled.

Do not look into the lens!
Be very careful not to look into the projection lens when the projector is turned on. The bright light may harm your eyes. Be especially careful to keep children from looking into the lens.

Power Source
Use only a three-wire grounding type power source. The power source should not exceed 250 volts rms between the supply conductors or between either conductor and the ground.

Power Cord
Use only the power cord that was shipped with the LitePro. Although other power cords might be similar in appearance, they

have not been safety-tested with the LitePro. Never use a power cord if it has become damaged or frayed. Contact your In Focus dealer or call In Focus if you need to replace your LitePro power cord.

Grounding

The LitePro is grounded through the grounding conductor on the power cord. To avoid electric shock, plug the power cord into a properly wired receptacle. Do not defeat the purpose of the grounding-type plug.

Fuse

For protection against the risk of fire, use only a fuse of the specified type. Refer to page 51 for more information about fuse specifications and to page 43 for instructions on replacing the fuse.

Lamp

To avoid overheating and unacceptable image quality, replace the projection lamp with a lamp of the specified type. Refer to page 51 for lamp specifications and to page 40 for instructions on replacing the lamps.

Hot Surfaces

The rear of the LitePro becomes very hot during operation. Avoid touching the exhaust grill on the lamp door. Allow the LitePro to cools for at least 20 minutes before replacing a lamp. When you open the lamp door, be very careful not to touch the hot surfaces inside.

Ventilation and Overheating

Openings in the LitePro case provide ventilation to protect it from overheating. Keep loose papers and other objects well away from the sides and back of the LitePro. Never operate the LitePro when the lamp door is open; this disrupts the cooling air flow inside and can cause the LitePro to overheat. Do not place the LitePro on top of or close to the computer or other heat-producing equipment.

Liquid Spills

Do not set drinks on top of the LitePro. Spilled liquids can flow inside and damage the LitePro.

Do Not Disassemble

The only user-serviceable parts on the LitePro are inside the lamp door at the rear. Do not open any other part of the LitePro. Opening the LitePro case will expose you to electric shock hazard. All service must be performed by an authorized In Focus service center.

Introduction

The In Focus Systems LitePro 560 and 570 LCD projectors provide 640x480 resolution with compatibility up to 800x600. The LitePro's active matrix liquid crystal display (LCD) is based on Thin Film Transistor (TFT™) technology. It can display up to 16.7 million colors. The LitePro is ideal for high-performance business, CAD and imaging applications that demand high resolution and exceptional color quality.

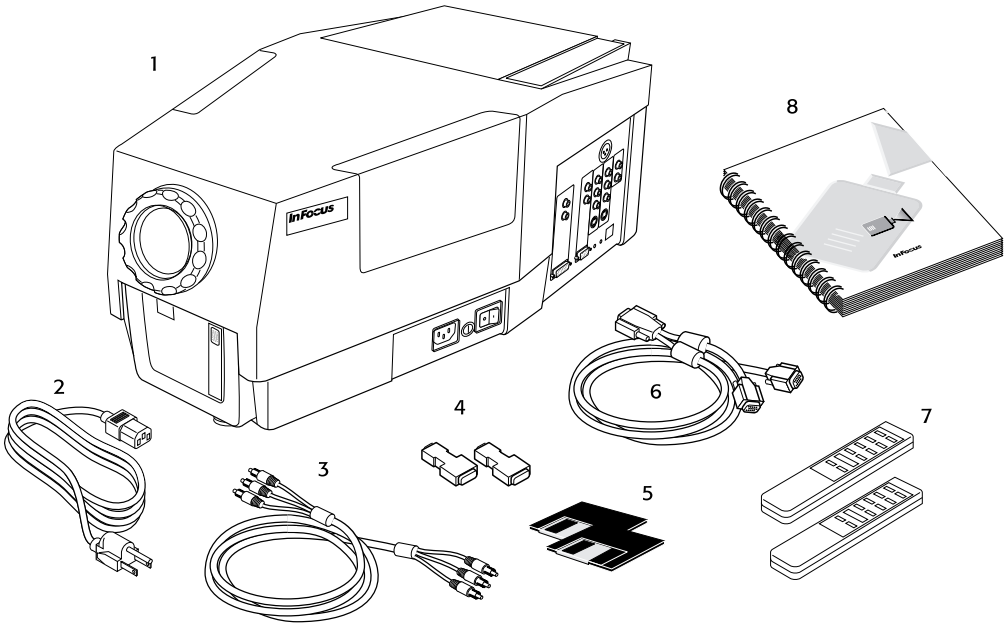

Figure 1. Shipping Box Contents

1. *LitePro 560/570 LCD projector*
2. *power cord*
3. *audio/video cable*
4. *Macintosh adapters (2)*
5. *LiteShow diskettes (LP 560LS & LP 570LS)*
6. *LitePro cable*
7. *remote control units (2)*
8. *LitePro 560/570 User's Guide*

not shown:

2 Fuses, 2 Projection Lamps, Soft Carrying Case, Lens Cover, Read Me First card, LiteShow User's Guide (LP 560LS & LP 570LS), Remote Control Programmer Kit

Compatibility

The LitePro is compatible with a wide variety of computers:

- IBM PC and compatibles, including laptop computers: in VGA graphics mode at all screen refresh rates; in SVGA and VESA up to 800x600 resolution at 56Hz and 60Hz refresh rates.
- IBM PS/2 in VGA and MCGA modes.
- Macintosh and Macintosh II series computers with detachable monitors, including Macintosh LC, Quadra, Centris and Power Macintosh in resolutions up to 832x624.
- Apple Powerbook computers with video-out port and cable.

The LitePro 560/570 is not compatible with these systems:

- IBM-compatibles in CGA or EGA graphics mode
- Macintosh 128, 512, Plus, SE, SE/30 or Classic
- Macintosh Portable 100

The resolution of the LitePro's projected image is 640x480. The LitePro displays computer images that are 640x480 or lower just as they appear on your computer's monitor. Screen resolutions between 640x480 and 800x600 are compressed to 640x480. The LitePro cannot display screen resolutions above 800x600. If your computer's screen resolution is higher than 800x600, reset it to a lower resolution before you connect the LitePro.

Cables and Adapters

The LitePro comes with these cables and adapters:

- The Y-shaped **LitePro cable** connects the LitePro to your computer and to your monitor. Its ends are labeled "LCD", "Monitor" and "VGA."
- The **audio/video cable** can be used to connect a video player or your computer's sound board to the LitePro.
- Two **Macintosh adapters** that attach to the "Monitor" and "VGA" ends of the LitePro cable for Macintosh systems.
- **Power cable**.

Remote Control Programmer Kit

The Remote Control Programmer Kit that was shipped with your LitePro allows you to program the LitePro's remote control to perform up to four different operations on your computer. Refer to the *Remote Control Programmer User's Guide* for more information.

Usage Guidelines

- Do not look directly into the projection lens when the LitePro is turned on! The bright light may harm your eyes.
- The back of the LitePro can be very hot to the touch after use. Use extreme care or let it cool before lifting it.
- Do not block the grills at the back of the LitePro. Restricting the air flow through the LitePro can cause it to overheat and turn off.
- Handle the LitePro as you would any product with glass components. Be especially careful not to drop it.
- Avoid leaving the LitePro in direct sunlight or extreme cold for extended periods of time. If this happens, allow it to reach room temperature before use.
- Transport the LitePro in the original shipping box or approved hard case (see your In Focus dealer for details on approved hard cases).

If You Need Assistance

The first place to look for help is in this manual. Be sure to check the troubleshooting guidelines in "Troubleshooting" starting on page 47.

If this manual does not answer your question, call your In Focus dealer. You can also call In Focus Technical Support directly at **1-800-294-6400**. Call between 6 a.m. and 5 p.m. PST, Monday through Friday. In Europe, call In Focus in The Netherlands at **(31) 23 5623200**.

Your LitePro is backed by a limited one-year warranty. The details of the warranty are printed at the back of this manual.

Setting Up the LitePro

This chapter describes how to position the LitePro projector for optimum viewing and how to connect it to your equipment.

1. If you are setting up the LitePro for the first time, you'll need to install the two projection lamps that were shipped with it. Refer to "Replacing the Projection Lamps" on page 40 for instructions.
2. Place the projector on a flat surface.
   - If you want to use the LitePro's Rear Project feature, set it up behind your translucent screen. Refer to "Rear Projection" on page 28 for more information.
   - The projector must be within 6 feet of your power source.
   - The projector must be within 6 feet of the computer.
   - The distance from the LitePro's lens to the screen determines the size of the projected image as shown below.

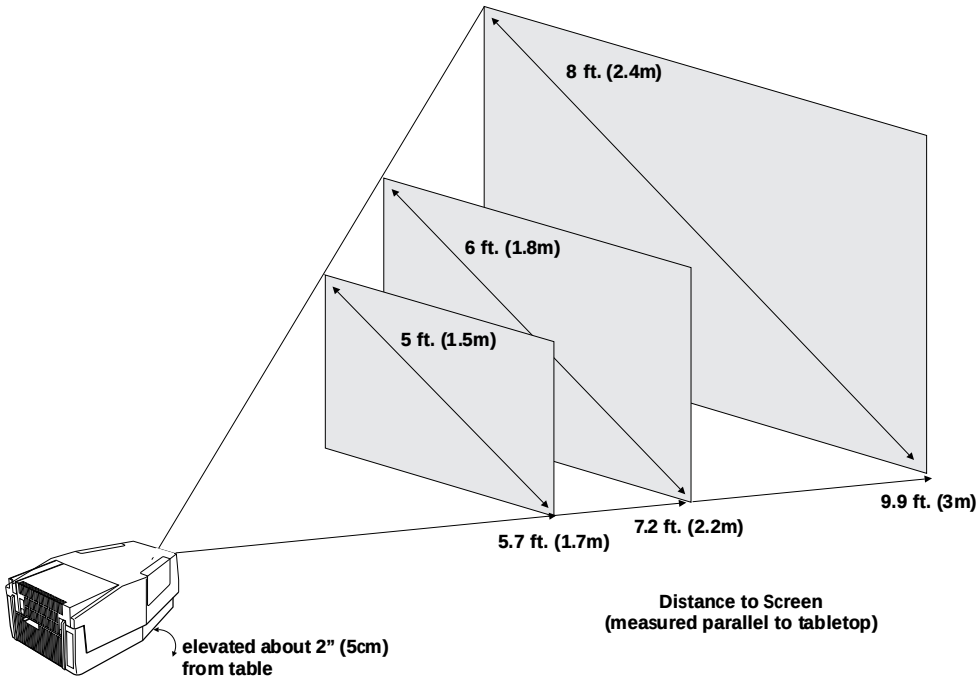

Figure 2. Image Size (measured diagonally)

- If you are installing the projector on the ceiling, refer to the *Ceiling Mount Installation Guide* for recommendations. (The Ceiling Mount Kit is sold separately; refer to ”Accessories” on page 53 for order information.)

3. Remove the lens cover.

4. Plug the power cord into the LitePro, then plug it into your electrical outlet. (A surge-protected power strip is recommended if power surges are common in your area.)

5. Make sure your computer and monitor are turned off.

6. Locate the Y-shaped LitePro cable that was shipped with your projector. Connect the end labeled “LCD” to the “Computer” connector on the side of the projector as shown below. (The “Computer” connector is in the “SOURCE 1” area of the LitePro’s connector panel.)

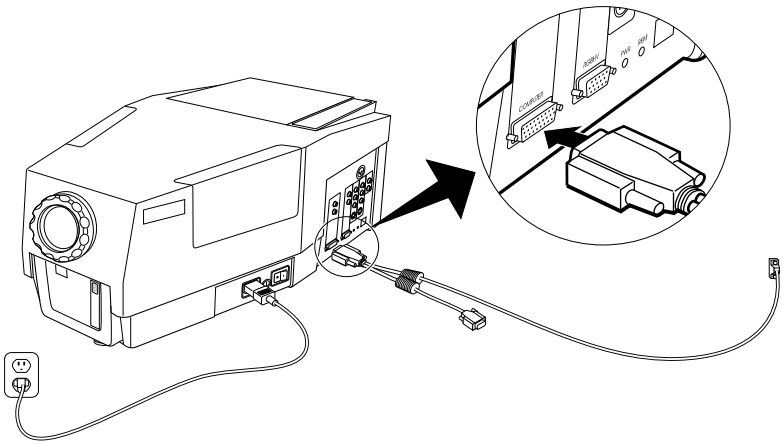

Figure 3. Connecting the “LCD” end of the LitePro cable

7. Locate your computer’s monitor cable; it connects your monitor to your computer. Unplug it at the computer end, leaving the monitor end attached.

- You will attach the LitePro cable to the monitor cable’s connector on the computer in the next step.

8. Connect the LitePro cable to the monitor connector on your computer according to the instructions below. Follow the instructions that apply to your computer.

Note

The resolution of the LitePro's image is 640x480. Images between 640x480 and 800x600 resolution are displayable, but will be compressed. Images above 800x600 are not displayable.

If your computer's screen resolution is greater than 800x600, you will need to reset it to 800x600 or less. Refer to your computer's documentation for instructions.

- **If you have a an IBM-compatible desktop computer**, plug the "VGA" end of the LitePro cable into the monitor connector on the computer.

  If you want to display your presentation on your monitor as well as on the projection screen, attach the "Monitor" end of the LitePro cable to the end of the monitor cable as shown below.

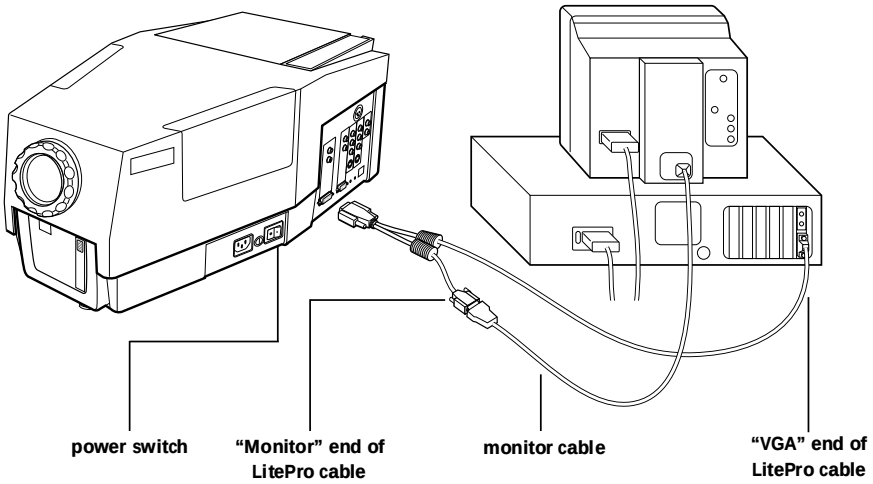

Figure 4. Connecting an IBM-compatible desktop computer

- **If you have a Macintosh desktop computer with a separate monitor,** attach one of the Mac adapters to the "VGA" end of the LitePro cable. Then plug the Mac adapter into the monitor connector on the computer.

  If you want to display your presentation on your monitor as well as on the projection screen, attach the "Monitor" end of the LitePro cable to the other Mac adapter. Then connect the Mac adapter to the end of the monitor cable as shown below.

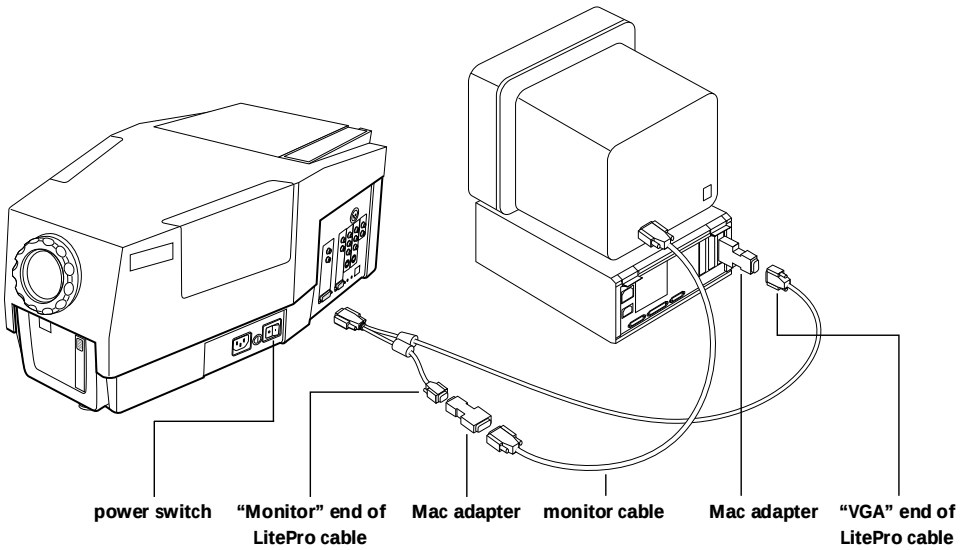

Figure 5. Connecting a Macintosh desktop computer

- **If you have an IBM-compatible laptop computer**, plug the "VGA" end of the LitePro cable into the external video connector on the computer as shown below.

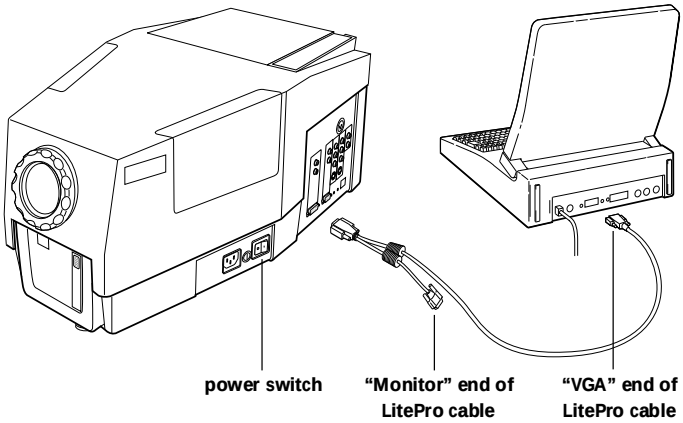

Figure 6. Connecting an IBM-compatible laptop computer

The LitePro connects to a laptop computer through the computer's external monitor port. Most laptop computers do not automatically activate their external monitor port when a device such as the LitePro is connected. Refer to your computer manual for the command that activates the external video port. The "Laptop Display Activation Chart" on page 56 lists the commands that activate the external monitor port for a variety of computers.

- **If you have an Apple PowerBook computer**, you'll need the video-out cable that came with your PowerBook and one of the Mac adapters that came with the LitePro. Connect the video-out cable to the video-out port on the back of the PowerBook. Connect the Mac adapter to the video-out cable. Connect the LitePro cable to the Mac adapter as shown below.

  If you have an Apple PowerBook Duo computer, you must have a DuoDock adapter (which provides a video out connector). You'll also need one of the Mac adapters that came with the LitePro. Follow the instructions for connecting a PowerBook.

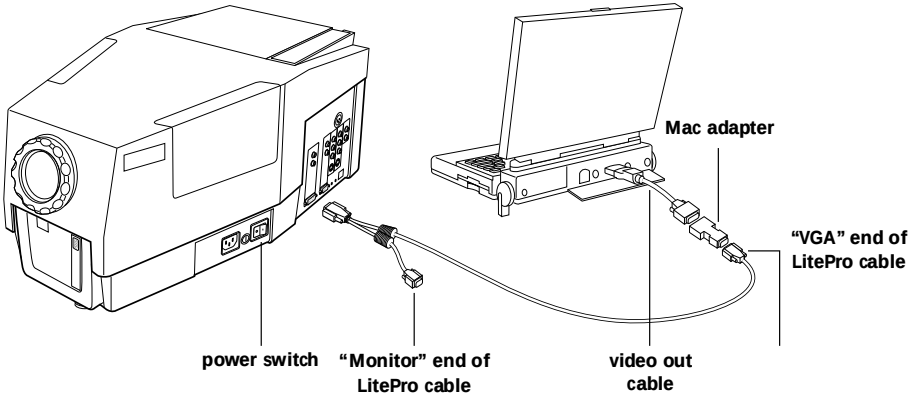

Figure 7. Connecting a Macintosh PowerBook

Note

Tighten the thumb screws on all cable connectors to ensure proper grounding.

9. If you want to connect a second computer, connect it to the LitePro's "RGBHV" connector with a 15-pin cable. (The RGBHV connector is in the "SOURCE 2" area of the connector panel.)

10. If you have a LitePro 570, you can connect it to your computer's sound board. Use the LitePro's audio/video cable to connect the left and right channels of your sound board to the left and right connectors on your LitePro. (Be sure to plug the audio cable into the same SOURCE area that your computer is plugged into.)

Note

If the audio connector on your computer's sound board is a mini-type jack, you will need an RCA jack-to-mini plug adapter. Refer to "Accessories" on page 53 for order information.

11. If you have a LitePro 570, you can connect it to a video player (laser disc, VCR, or camcorder).

- If your video player provides a **composite signal**, its video-out connector is a small, round RCA type jack. Using the audio/video cable that came with the LitePro, plug the yellow connector into the video-out jack on the video player. Plug the other yellow connector into the composite connectors in the "SOURCE 3" or "SOURCE 4" areas on the LitePro as shown below.

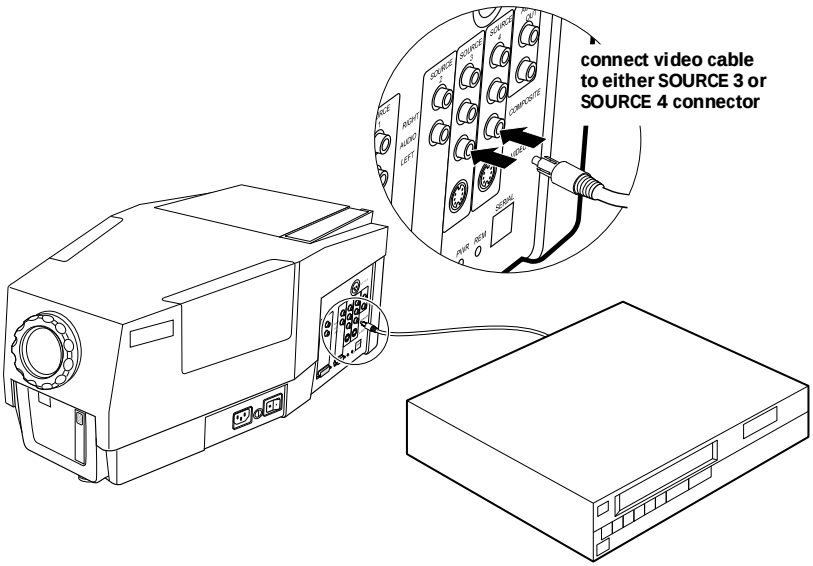

Figure 8. Connecting a Composite Video Cable

- If your video player provides an **S-Video signal**, its video-out connector is a slightly larger, round, four-pin S-Video jack. You cannot use the audio/video cable that came with the LitePro; you will need to obtain an S-Video cable. Plug your S-Video cable into the S-Video connectors in the "SOURCE 3" or "SOURCE 4" areas on the connector panel as shown below.

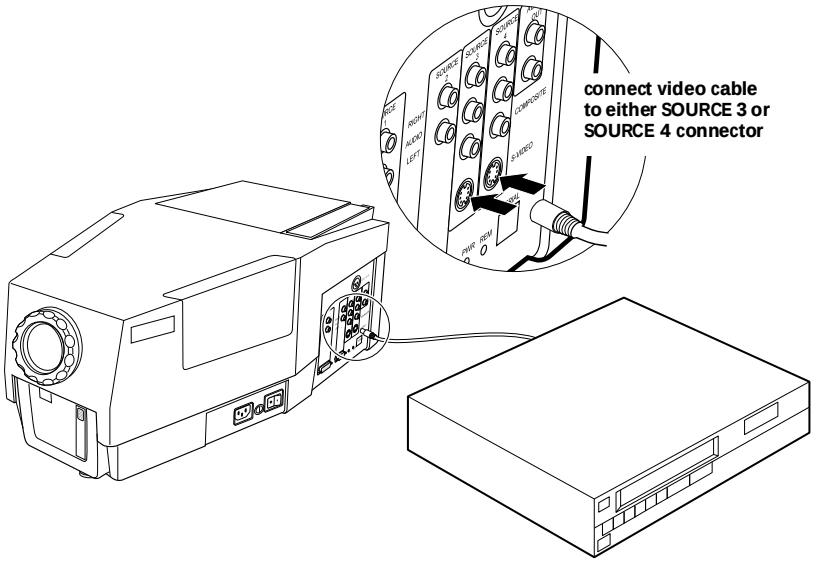

Figure 9. Connecting an S-Video Cable

Note

The video-out connector on your video player may be labeled "To Monitor."

12. If you have a LitePro 570, you can connect the it to an audio source. Plug the red and white connectors on the LitePro's audio/video cable into the corresponding audio connectors on your video player. Plug the other red and white connectors into the corresponding "SOURCE 3" or "SOURCE 4" audio connectors on the LitePro as shown below.

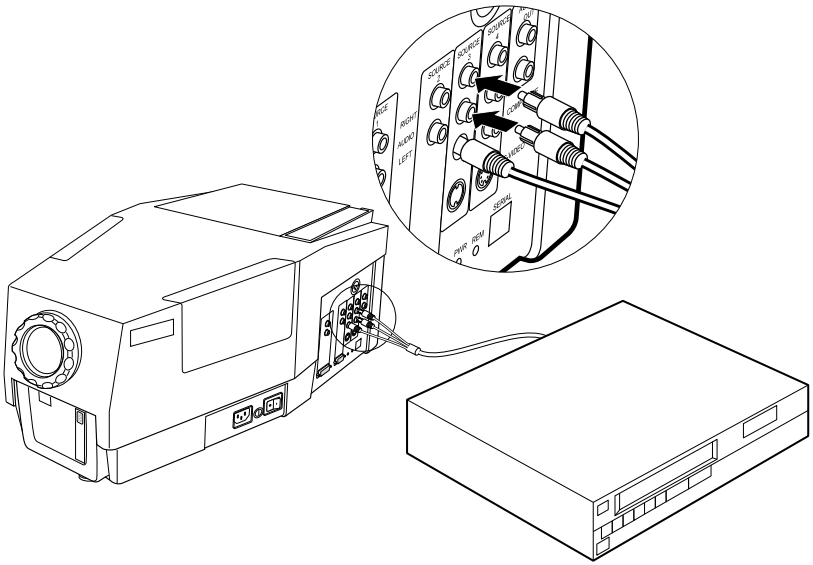

Figure 10. Connecting the Audio from a Video Player

13. If you have a LitePro 570, you can connect it to an externally amplified speaker system. Plug your audio cable into the "Audio Out" connectors on the LitePro.

Note

You must use an amplified external speaker with the LitePro. A non-amplified (passive) speaker will not work.

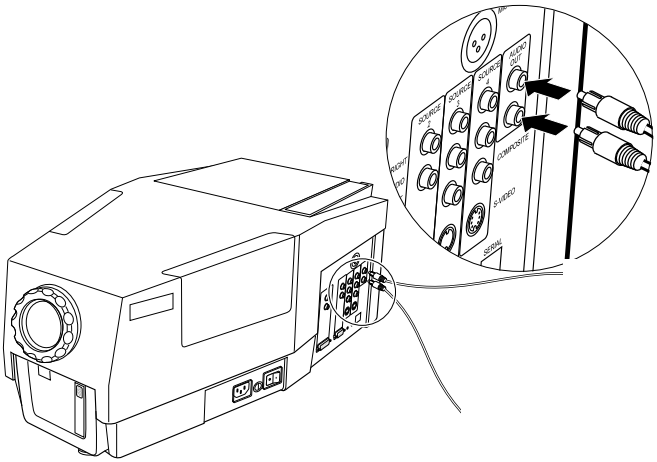

Figure 11. Connecting an external speaker

14. If you have a LitePro 570, you can connect it to a microphone. Insert the microphone cable into the 3-prong XLR microphone jack on the LitePro.

Caution

Always keep the source volume at its lowest level when installing the microphone. For setting the microphone level, refer to"Volume and Audio Lock" on page 36.

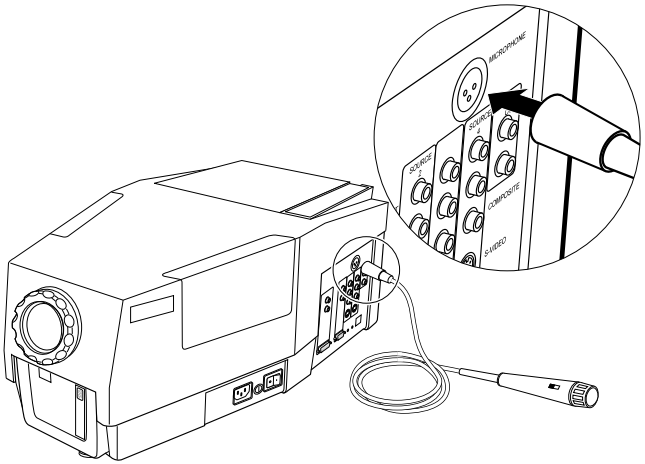

Figure 12. Connecting a microphone

15. Turn on your monitor.

16. Plug the power cord into the projector, then plug it into your electrical outlet.

Caution

Always use the power cord that was shipped with your LitePro. The projector accepts power from 100 VAC and 220 VAC, 50 or 60 Hz, three-wire type grounded sources. When you disconnect the projector, always remove the power cord from the electrical outlet first, then from the projector.

17. Turn on the projector by pressing the " | " side of the power switch on the side of the projector.

- While the projector is on, you can switch the projection lamp off by pressing the **standby** button on the remote.
- After about 5 seconds, the projector test pattern appears. (If it does not, refer to "Troubleshooting" on page 47. If you are using an IBM-compatible laptop computer, refer to "Laptop Display Activation Chart" on page 56 for display activation commands.)
- If the image is not projected directly on the screen, adjust the height of the elevator. Refer to "Adjusting the Height" on page 18 for instructions.
- If you need to focus the projector, turn the focus ring on the projector's lens until the image is clear. Refer to "Focusing the Image" on page 18 for more information.

Note

With some computers, the order in which you power up the equipment is very important. We recommend that you always turn on the LitePro FIRST. This is especially important if your computer is a Macintosh.

18. Turn on your computer.

Your LitePro is now ready to use. See "Using the LitePro" on page 17 for information about using the remote and the on-screen menu.

Using the LitePro

This section describes how to use and make adjustments to the LitePro 560/570. It also provides a reference to the remote control buttons and the menu commands.

Basic Image Adjustment

- If the image is not completely displayed, adjust the height of the LitePro (page 18) or use the arrow buttons to center the image (page 21).
- If the image is out of focus, rotate the lens to focus it (page 18).
- If the image still looks bad after you have adjusted the focus, adjust the signal synchronization (page 27) and/or the tracking (page 33).
- If the colors do not look right, adjust the brightness (page 26), then adjust the sync again (page 27).

Turning the LitePro Off

It is very important to allow the projector to cool down before turning it completely off. Turning the projector off is a two-step process:

1. Press the **standby** button on the remote.
   - The bulb turns off, but the fans remain on to cool the LCD.
2. After a few minutes, when the projector has cooled, press the "O" side of the power switch to turn the projector completely off.

Using the Remote Control

Point the remote control at the projection screen or at the front of the LitePro. The range for optimum operation of the remote control is a total of about 25 feet. If you point the remote at the projection screen, the distance to the screen and back to the LitePro should be less than or equal to 25 feet.

Focusing the Image

To focus the image, rotate the projection lens until the image is clear. Rotate the lens clockwise for a longer focusing distance. Rotate it counterclockwise for a shorter focusing distance.

Adjusting the Height

Your LitePro is equipped with a self-locking, quick-release elevator foot. If the projected image seems wider at the bottom than at the top, extend the elevator foot until the distortion is corrected.

To raise the LitePro:

1. Raise the front of the projector off the table by lifting up on the handle.
2. Press the quick-release button (just inside the handle). The elevator foot releases.
3. Gently lift or lower the projector to the desired height. When you release the handle, the elevator foot locks into position.
4. To more closely adjust the projector's height, rotate the elevator foot clockwise to raise the projector. Rotate it counterclockwise to lower the projector.

To lower the elevator foot:

- Holding the LitePro handle, press the elevator's quick release button. Push the elevator back up into the projector.

Warning

Always hold the LitePro's handle when you press the elevator's quick release button.

Switching to the Spare Lamp

The LitePro was shipped with two projection lamps. To avoid breaking during shipping, they are not installed at the factory. You must install them before you can use the LitePro. Refer to the "Read Me First" document that was shipped with your LitePro for instructions. "Replacing the Projection Lamps" on page 40 also describes this procedure.

When both lamps are installed in the LitePro, only one is used at a time. The other is available as a spare for when the active lamp fails. The average lamp life is about 50 hours.

To switch to the spare lamp:

- Gently slide the lamp changer knob to the other side of the projector as shown here.

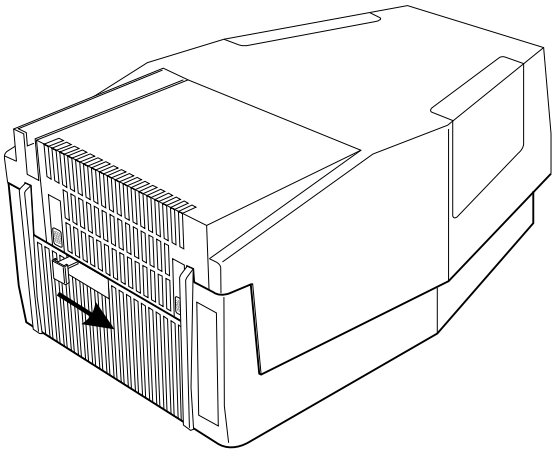

Figure 13. Switching to the Spare Lamp

Warning

When switching lamps, be careful not to touch the exhaust grill on the door. This area is very hot when the projector is operating.

Using the Remote Control Buttons

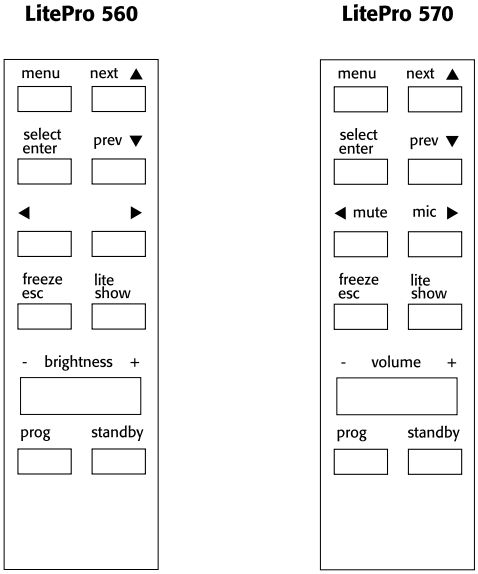

Figure 14. Remote Control Buttons

menu

Pressing **menu** accesses the LitePro's on-screen menus. There are three menus: Menu 1, Menu 2 and the Audio Menu. Menu 1 always displays first. Refer to "Using the Menus" on page 24 for more information about the menus.

When a menu is displayed, pressing **menu** again removes it from the screen. When you remove a menu, the LitePro saves any changes you made. The changes you made will be saved even after you turn the LitePro off.

LP 560LS & LP 570LS: When a LiteShow presentation is displayed, **menu** has a different function; it displays the LiteTable to allow you to edit your LiteShow presentation. Refer to the LiteShow User's Guide for information about LiteShow presentations.

arrow buttons

The operations of the arrow buttons depend on what is displayed. When a menu is displayed, the left and right arrow buttons move the highlight bar to select a menu function. The up and down arrow buttons adjust or change the value of the highlighted function. The arrow buttons are auto-repeating; they repeat their function as long as you hold down the button.

When a computer or video image is displayed, the left and right arrow buttons perform their alternate functions, **mute** and **mic**. These are described below.

LP 560LS & LP 570LS: When a LiteShow presentation is displayed, the up and down arrow buttons perform their alternate functions, **next** and **prev**. These are described below.

select/enter

The operation of the **select/enter** button also depends on what is displayed. When Menu 2 or the Audio Menu is displayed, **select/enter** cycles forward through the available settings for the highlighted function.

When a computer or video image is displayed, **select/enter** switches among the sources that are connected and enabled, such as computer(s) in Source 1 and/or 2 and video player(s) in Source 3 and/or 4. If only one source is connected, **select/enter** switches between the source image and the test pattern. If the test pattern is turned off, **select/enter** switches between the source image and a blank screen. (Connecting sources is described starting on page 5. Enabling sources is described on page 31. Turning off the test pattern is described on page 29. Video players can only be connected to the LitePro 570.)

LP 560LS & LP 570LS: When a LiteShow presentation is displayed, the **select/enter** button has a different function. Refer to the *LiteShow User's Guide* for more information.

next

LP 560LS & LP 570LS: When a LiteShow presentation is displayed, press **next** to advance to the next slide in your presentation. Refer to the *LiteShow User's Guide* for more information.

prev

LP 560LS & LP 570LS: When a LiteShow presentation is displayed, press the **prev** button to go back to the previous slide in your presentation. Refer to the *LiteShow User's Guide* for information.

mute

LP 570 & LP570LS: Pressing **mute** enables and disables both the external and internal audio functions.

mic

LP 570 & LP 570LS: Pressing **mic** enables and disables the microphone.

freeze/esc

The operation of the **freeze/esc** button depends on what is displayed. When a computer image, a video image or a menu is displayed, press **freeze/esc** to pause the display. Press it again to return to the current image.

LP 560LS & LP 570LS: When a LiteShow presentation is displayed, press **freeze/esc** to exit LiteShow menus and cancel LiteShow operations. Refer to the *LiteShow User's Guide* for more information.

lite show

LP 560LS & LP 570LS: Press **lite show** to switch to your LiteShow presentation. Press **lite show** again to return to your computer or video image. Refer to the *LiteShow User's Guide* for information about using LiteShow.

volume

LP570 & LP 570LS: Pressing either end of the **volume** button adjusts the volume of the active audio source. (To activate a different audio source or lock the volume onto one source, see "Volume and Audio Lock" on page 36.)

prog

The **prog** button is programmable. You can program it to perform any one of these functions.

- Clear Black
- Clear White
- LS (LiteShow) Grab
- Mic
- Loudness
- RS-232
- Sync
- Palette
- Mute
- Text Mode

Refer to "Prog Button" on page 32 for descriptions of these operations and instructions on how to program the button.

standby

The **standby** button switches the projection lamp off. Press any button to turn it back on.

Using the Menus

The LitePro has three menus: Menu 1, Menu 2, and the Audio Menu.

Menu 1

Menu 1 allows you to adjust the brightness, tint, synchronization (sync), and display positioning. Each of the these menu settings is described in “Menu 1 Functions” starting on page 26.

To display Menu 1:

- Press the **menu** button on the remote.

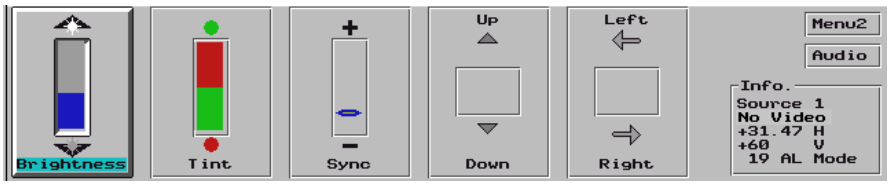

Figure 15. Menu 1

Note

If you see “EEPROM Failed” displayed on Menu 1, one of the integrated circuits inside the LitePro has failed. The LitePro will continue to operate normally. The only loss of functionality is that changes you make in the menus will not be saved after you turn the LitePro off. All settings will return to their defaults. Call In Focus Technical Support. Refer to “If You Need Assistance” on page 3 for the phone number.

Menu 2

Menu 2 contains controls for a variety of functions that you probably won’t need to change very often. Each of these is described later in this manual in “Menu 2 Functions” starting on page 28.

To display Menu 2:

1. Press the **menu** button on the remote to display Menu 1.
2. Press the left or right arrow buttons until “Menu 2” is highlighted.
3. Press **select/enter**.

Figure 16. Menu 2

The Audio Menu

LP 570 & LP 570LS: The Audio Menu contains controls for the LitePro 570's audio functions. Each of these is described later in this manual in "Audio Menu Functions" starting on page 36.

To display the Audio Menu:

1. Press the **menu** button on the remote to display Menu 1.
2. Press the left or right arrow buttons until "Audio" is highlighted.
3. Press **select/enter**.

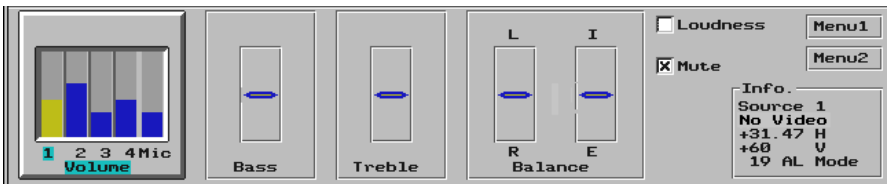

Figure 17. Audio Menu

The right side of each menu contains information about the state of the LitePro. If you need to call In Focus Technical Support for assistance, they may need to know these values.

Highlighting Menu Functions

You must highlight a function before you can change its setting.

- Use the left and right arrow buttons to highlight functions.

Making Changes to Menu Functions

When the function you want to change is highlighted, you can change the setting.

- Use the up and down arrow buttons to adjust settings up and down.

- In Menu 2 and the Audio Menu, you can also use **select/enter** to select / de-select a function or to increase the value of a function.

Removing the Menu from the Screen

Press the **menu** button to remove the menu from the screen.

Resetting Menu Functions to the Default Settings

To reset all menu settings to their factory default values, select Reset from Menu 2. Refer to page 30 for more information about Reset.

Menu 1 Functions

Brightness

Adjusting the brightness changes the color saturation. Adjusting the brightness has no effect if a computer source is not connected.

To adjust the brightness:

1. Press the **menu** button to display Menu 1.
2. Use the right or left arrow buttons to highlight “Brightness”.
3. Press the up arrow button to increase brightness. Press the down arrow button to decrease brightness.

Tint

The tint function adjusts the red-green color balance. Adjusting the tint has no effect if a computer is not connected.

To change the tint:

1. Press the **menu** button to display Menu 1.
2. Use the right or left arrow buttons to highlight “Tint”.
3. Press the up arrow button to increase the amount of green in the image. Press the down arrow to increase the amount of red in the image.

Sync

The LitePro adjusts signal synchronization automatically for most computers. But if the projected computer image looks fuzzy, streaked or noisy, try adjusting the sync from this menu.

To adjust the Sync:

1. Press the **menu** button to display Menu 1.
2. Use the right or left arrow buttons to highlight “Sync”.
3. Press the up or down arrow buttons to adjust the Sync.

Up/Down

These functions allow you to change the vertical position of the projected image.

To re-position the display:

1. Press the **menu** button to display Menu 1.
2. Use the right or left arrow buttons to highlight “Up/Down”.
3. Press the up arrow button to move the image up. Press the down arrow button to move it down.

Left/Right

These functions allow you to change the horizontal position of the projected image.

To re-position the display:

1. Press the **menu** button to display Menu 1.
2. Use the right or left arrow buttons to highlight “Left/Right”.
3. Press the up arrow button to move the image to the left. Press the down arrow button to move it to the right.

Menu 2 Functions

Rear Projection

When you select Rear Projection, the LitePro reverses the image so you can project from behind the screen as shown here.

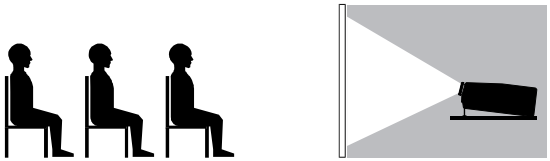

To enable or disable to rear projection mode:

1. Press the **menu** button to display Menu 1.
2. Use the right or left arrow buttons to highlight “Menu 2”.
3. Press **select/enter** to display Menu 2.
4. Use the right or left arrow buttons to highlight “Rear Projection”.
5. Press **select/enter** to enable Rear Projection. The image immediately changes to display the mirror image. (Press **select/enter** again to change it back.)

Source Prompt

When you are displaying your presentation and you press **select/enter** to switch sources, the LitePro momentarily displays the name of the active source. If you don’t want this display, follow the steps below to disable the Source Prompt.

To enable or disable the Source Prompt:

1. Press the **menu** button to display Menu 1.
2. Use the right or left arrow buttons to highlight “Menu 2”.
3. Press **select/enter** to display Menu 2.
4. Use the right or left arrow buttons to highlight “Source Prompt”.
5. Press **select/enter** to enable or disable the Source Prompt.

Test Pattern

If the test pattern is turned on, it displays when the LitePro is first powered on and also when no computers or video players are connected to the LitePro. If the test pattern is turned off, it displays only when the LitePro is first powered on. As long as the test pattern is turned off, the only way to display it is to unplug the power supply cord, then plug it back in again. (Refer to "select/enter" on page 21 for additional information about the test pattern.)

To enable or disable the test pattern:

1. Press the **menu** button to display Menu 1.
2. Use the right or left arrow buttons to highlight "Menu 2".
3. Press **select/enter** to display Menu 2.
4. Use the right or left arrow buttons to highlight "Test Pattern".
5. Press **select/enter** to enable or disable the test pattern off.

RS-232

When the LitePro's RS-232 connection is enabled, you can use the LitePro's remote control to send commands to your computer. To use this feature, you must install the Remote Control Programmer that was shipped with your LitePro. Refer to the *Remote Control Programmer User's Guide* for more information.

To enable or disable the RS-232 serial port:

1. Press the **menu** button to display Menu 1.
2. Use the right or left arrow buttons to highlight Menu 2.
3. Press **select/enter** to display Menu 2.
4. Use the right or left arrow buttons to highlight "RS-232".
5. Press **select/enter** to enable or disable the RS-232 port.

Auto Standby

When you enable Auto Standby, the LitePro automatically turns off the projection lamp after a specified period of time. You can specify 5, 10 or 30 minutes. If Auto Standby is turned off, you can still turn off the lamp by pressing the **standby** button on the remote. Refer to page 17 and page 23 for additional information about Standby.

To enable Auto Standby:

1. Press the **menu** button to display Menu 1.
2. Use the right or left arrow buttons to highlight “Menu 2”.
3. Press **select/enter** to display Menu 2.
4. Use the right or left arrow buttons to highlight “Auto Standby”.
5. Press **select/enter** to cycle through the settings.

Reset

The Reset function changes all the menu function settings back to the factory default states.

The defaults are:

• Rear Projection	off	• Test Pattern	on
• Source Prompt	on	• RS-232	on
• Auto Standby	30 minutes	• Reset	off
• Source Enable	all sources enabled	• Text Mode	off
• Prog Button	clear white	• Comp(ress)	off
• Palette	24,389	• Sharpness	off
• Language	English	• Loudness	off
• Video Type	NTSC	• Mute	off

To reset your adjustments:

1. Press the **menu** button to display Menu 1.
2. Use the right or left arrow buttons to highlight “Menu 2”.
3. Press **select/enter** to display Menu 2.
4. Use the right or left arrow buttons to highlight “Reset”.
5. Press **select/enter**. The LitePro immediately resets all the function settings.

Source Enable

When you have more than one source (computer or video player) connected to the LitePro, you switch between them by pressing the **select/enter** button on the remote. If you have a source connected that you don't want to display, use the Source Enable function to disable that source. That source will then be skipped when you press **select/enter**.

If you disable a source, you will not be able to display it. You will have to return to Menu 2 and enable it again.

By default, all 4 sources are enabled.

To enable or disable a source:

1. Press the **menu** button to display Menu 1.
2. Use the right or left arrow buttons to highlight "Menu 2".
3. Press **select/enter** to display Menu 2.
4. Use the right or left arrow buttons to highlight the source under "Source Enable" that you want to enable or disable.
5. Press **select/enter** to enable or disable that source. All enabled sources are marked with an "x".

Palette

You can select a color palette of 512, 24,389, 1.4 million or 16.7 million colors. The default is 24,389 colors.

If your computer's graphics mode is EGA, the LitePro displays a maximum of 16 colors regardless of the Palette setting. When a video image is displayed, the LitePro displays 1.4 million colors, regardless of the Palette setting.

To change the color palette:

1. Press the **menu** button to display Menu 1.
2. Use the right or left arrow buttons to highlight "Menu 2".
3. Press **select/enter** to display Menu 2.
4. Use the right or left arrow buttons to highlight "Palette".
5. Press **select/enter** until the palette you want is displayed. Each time you press **select/enter**, the LitePro immediately changes the palette.

Prog Button

Use the Prog Button function to assign an operation to the remote's **prog** button. You can assign any one of these functions.

- **Clear Black** and **Clear White** make the entire screen black or white, respectively. Press any key to return to your image.)
- LP 560LS & LP 570LS: **LS Grab** captures the current image and saves it on your LiteShow disk. Refer to your *LiteShow User's Guide* for more information.
- LP 570 & LP 570LS: **Mic** turns the microphone off or on.
- LP 570 & LP 570LS: **Loudness** turns Loudness on or off. Loudness adjusts the audio quality by enhancing the bass portion of the sound.
- **RS-232** enables Remote Control Programmer if it is installed on your computer. Remote Control Programmer allows you to use the arrow buttons on the LitePro remote to control your computer. You will also need to connect your serial source to the "SERIAL" connector on the LitePro. Refer to the *Remote Control Programmer User's Guide* for more information. (When RS-232 is enabled, you cannot use the arrow buttons to select menu functions.)
- **Sync** adjusts the signal synchronization between the LitePro and the computer.
- **Palette** changes the number of displayable colors in the projected image. Refer to page 31 for more information about the Palette settings.
- LP 570 & LP 570LS: **Mute** turns off the sound.
- **Text Mode** switches the display to Text Mode. Text Mode is needed only if you are displaying DOS text that is 720 pixels wide. Refer to page 34 for more information.

To change the **prog** button assignment:

1. Press the **menu** button to display Menu 1.
2. Use the right or left arrow buttons to highlight "Menu 2"
3. Press **select/enter** to display Menu 2.
4. Use the right or left arrow buttons to highlight "Prog Button".
5. Press **select/enter** until the function you want is displayed. Now, whenever you press **prog**, the LitePro performs the function you selected.

Language

The Language function changes the language in which the LitePro menus are displayed. You can choose from English, French, German, Spanish or Italian. The default is English.

To change the language of the menus:

1. Press the **menu** button to display Menu 1.
2. Use the right or left arrow buttons to highlight “Menu 2”
3. Press **select/enter** to display Menu 2.
4. Use the right or left arrow buttons to highlight “Language”.
5. Press **select/enter** until the language you want is displayed. Each time you press **select/enter**, the LitePro immediately re-displays the menu in the selected language.

Tracking

The LitePro usually adjusts tracking automatically when you connect your computer. However, if the display shows evenly spaced, fuzzy, vertical lines or if the projected image is too wide or too narrow for the screen, you might be able to improve it by adjusting the tracking manually with the Tracking function.

To adjust the tracking:

1. Press the **menu** button to display Menu 1.
2. Use the right or left arrow buttons to highlight “Menu 2”.
3. Press **select/enter** to display Menu 2.
4. Use the right or left arrow buttons to highlight “Tracking”.
5. Press **select/enter** or the up arrow button to increase the tracking value. Press the down arrow button to decrease the value.

Text Mode and Pixel Slice

Some IBM-compatible computer display modes generate a 720 pixel-wide image which extends beyond the LitePro's 640 pixel-wide image area. For most computers, the LitePro automatically enables Text Mode, compressing the display to fit. But if you are displaying text that appears to be truncated on the right side, you may need to manually enable Text Mode.

When you enable Text Mode, the LitePro compresses the image by removing every 9th column of pixels; this is referred to as "pixel slice". There are 9 pixel slice settings. Choose the one that results in the most acceptable display.

To enable Text Mode:

1. Press the **menu** button to display Menu 1.
2. Use the right or left arrow buttons to highlight "Menu 2".
3. Press **select/enter** to display Menu 2.
4. Use the right or left arrow buttons to highlight "Text Mode".
5. Press **select/enter** to enable Text Mode (an "x" appears in the box).
6. If you want to change the Pixel Slice setting, use the right or left arrow buttons to highlight "Pixel Slice". Press **select/enter** to cycle through the settings until you find the one that results in the best image.

Video Type

Television video signal standards vary throughout the world. The LitePro can adapt to the three most common standards: NTSC, PAL and SECAM.

- NTSC is used in North America and parts of South America.
- PAL is used in Europe, Australia, China and parts of South America and Africa.
- SECAM is used in France, some parts of Africa, Eastern Europe and the Middle East.

If you don't know which standard is used in your area, select the one that provides the best image. The default setting is NTSC.

To change the video type setting:

1. Press the **menu** button to display Menu 1.
2. Use the right or left arrow buttons to highlight “Menu 2”.
3. Press **select/enter** to display Menu 2.
4. Use the right or left arrow buttons to highlight “Video Type”.
5. Press **select/enter** until the type you want is displayed.

Comp.

Compress is only functional for PAL video displays. PAL video produces an image that is slightly too large for the LitePro to display. Enabling the Compress function compresses the image to fit.

To enable or disable PAL video compression:

1. Press the **menu** button to display Menu 1.
2. Use the right or left arrow buttons to highlight “Menu 2”.
3. Press **select/enter** to display Menu 2.
4. Use the right or left arrow buttons to highlight “Comp”.
5. Press **select/enter** enable or disable compression.

Sharpness

Sharpness is only functional for NTSC, PAL and SECAM video images. If you notice “comb-like” edges in your video display, you may want to enable Sharpness. Turning Sharpness on smooths out the images. The “comb” effect is most noticeable in fast-moving videos that contain high contrast images.

To enable or disable video sharpness:

1. Press the **menu** button to display Menu 1.
2. Use the right or left arrow buttons to highlight “Menu 2”.
3. Press **select/enter** to display Menu 2.
4. Use the right or left arrow buttons to highlight “Sharpness”.
5. Press **select/enter** button to enable or disable sharpness.

Audio Menu Functions

The Audio Menu is available on LP 570 & LP 570LS only.

Volume and Audio Lock

You can adjust the volume either with the **volume** button on the remote or from the Audio Menu. If you want to adjust the volume for all sources and the microphone at one time, it is probably easier to use the Audio Menu. (To adjust the volume using the remote, see "volume" on page 22.)

To adjust the volume from the Audio Menu:

1. Press the **menu** button to display Menu 1.
2. Use the right or left arrow buttons to highlight "Audio".
3. Press **select/enter** to display the Audio Menu.
4. Use the right or left arrow buttons to highlight the source (or microphone) you want to adjust.

Caution

Be sure that the microphone volume is set to a low level before you install a microphone. If it is set too high, you may damage the LitePro's speakers.

5. Press the up arrow button to increase the volume. Press the down arrow button to decrease the volume.

   If you want to lock the audio on one of the sources, highlight the source and press **select/enter**. The LitePro enables Audio Lock, placing a padlock icon above the source. When an audio source is locked, the LitePro will always play it, regardless of which source is selected.

   For example, if you are using a video in addition to a computerized slide show in your presentation, you might want to set Audio Lock on the video source (source 3 or 4). The audio portion of the videotape will continue to play even when you switch over to display the slide show on the computer.

Bass

The Bass function adjusts the lower frequencies of your audio source.

To adjust the bass for the selected audio source:

1. Press the **menu** button to display Menu 1.
2. Use the right or left arrow buttons to highlight “Audio”.
3. Press **select/enter** to display the Audio Menu.
4. Use the right or left arrow buttons to highlight “Bass”.
5. Press the up arrow button to increase the bass. Press the down arrow button to decrease the bass.

Treble

The Treble function adjusts the higher frequencies of your audio source.

To adjust the treble for the selected audio source:

1. Press the **menu** button to display Menu 1.
2. Use the right or left arrow buttons to highlight “Audio”.
3. Press **select/enter** to display the Audio Menu.
4. Use the right or left arrow buttons to select “Treble”.
5. Press the up arrow button to increase the treble. Press the down arrow button to decrease the treble.

Balance and Fade

Adjusting the balance controls the audio levels between the right and left channels of your audio source. The Balance function also fades the level between the internal and external speakers (if you have connected an external speaker).

To adjust the balance for the selected audio source:

1. Press and release the **menu** button to display Menu 1.
2. Use the right or left arrow buttons to highlight “Audio”.
3. Press **select/enter** to display the Audio Menu.
4. Use the right or left arrow buttons to highlight “Balance”. The “L/R” bar is highlighted.
5. Use the up and/or down arrow buttons to adjust the left-to-right balance.

6. If you want to adjust the internal-to-external speaker fade, press the right arrow button to highlight the “I/E” bar. Then use the up and/or down arrow buttons to adjust the fade.

Loudness

Enabling Loudness adjusts the audio quality by enhancing the bass portion of the sound.

To enable or disable Loudness for the selected audio source:

1. Press the **menu** button to display Menu 1.
2. Use the right or left arrow buttons to highlight “Audio”.
3. Press **select/enter** to display the Audio Menu.
4. Use the right or left arrow buttons to highlight “Loudness”.
5. Press **select/enter** to enable or disable Loudness.

Mute

Enabling Mute turns off the audio from the selected source. You can also mute the selected source by pressing the **mute** button on the remote when a computer or video image is displayed.

To select the mute function:

1. Press the **menu** button to display Menu 1.
2. Use the right or left arrow buttons to highlight “Audio”.
3. Press **select/enter** to display the Audio Menu.
4. Use the right or left arrow buttons to highlight “Mute”.
5. Press **select/enter** to enable or disable Mute.

Maintenance

This section describes how to:

- clean the lens,
- replace the projection lamps,
- replace the batteries in the remote control, and
- replace the fuse.

Warning

Do not open the LitePro case!
Opening the case will expose you to electric shock hazard! Except for the projection lamps, there are no user-serviceable parts inside! If you are having problems with your LitePro, refer to "Troubleshooting" on page 47 of this User's Guide. Call In Focus Technical Support if necessary. If your LitePro needs repair, they will refer you to an In Focus Authorized Service Provider.

Cleaning the Lens

Follow these steps to clean the projection lens.

1. Apply a non-abrasive glass cleaner to a soft, dry cleaning cloth.
   - Be careful not to use excessive amounts of cleaner.
   - Abrasive cleaners, solvents or other harsh chemicals may scratch the lens.
2. Lightly wipe the cleaning cloth over the lens.
3. If you will not be using the LitePro immediately, replace the lens cover.

Replacing the Projection Lamps

When a lamp fails, be sure to replace it with another EVD lamp (36 volt, 400 watt). These lamps provide the best performance and longest lamp life.

You can order replacement lamps from In Focus. Refer to "Accessories" on page 53 for information.

Follow these steps to replace the lamps.

1. Press the "O" side of the LitePro's power switch. Then, allow the LitePro to cool thoroughly (at least 20 minutes).

Warning

Allow the LitePro to cool for at least 20 minutes before you attempt to open the lamp door! The inside of the LitePro lamp housing can become very hot. Use extreme care.

2. While you're waiting for the LitePro to cool, find a clean soft cloth that you can use to hold the lamp. You can also hold it with the plastic bag that comes with each new lamp. Holding a lamp with your bare fingers can damage it and shorten its life.
3. Disconnect the power cord from the LitePro.
4. Open the lamp door. To do this, push in on the two buttons as shown in Figure 18.
5. Hold the lamp door open with one hand.
6. Using the cloth, unplug the old lamp from its socket as shown in Figure 18. Be very careful not to touch surfaces that may still be hot.

Warning

Do not touch the lamps with your bare fingers. Always hold them with a clean cloth. The natural oil on your skin concentrates the heat and may destroy the lamps.

7. Keeping it in its plastic bag, remove one of the new lamps from the box.

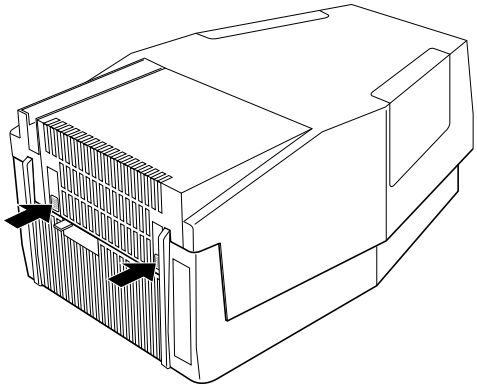

Figure 18. Opening the Lamp Door

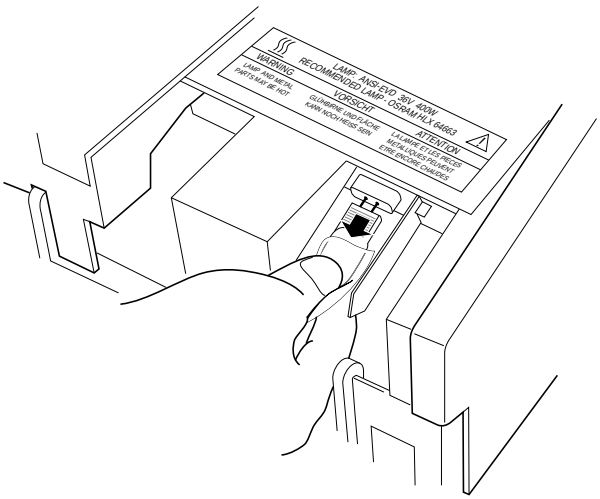

Figure 19. Removing the Lamp

8. Without forcing it, insert the lamp all the way into the socket. Be sure to insert it straight into the socket; do not tip it up or down.
9. Slide the lamp changer to the other side.
10. Replace the other lamp if necessary. Be sure not to touch it with your bare fingers.

- Save the box. You may need it later to pack the lamps for shipping.

11. Close the lamp door.

Caution

Never operate the LitePro with the lamp door open or removed. This disrupts the air flow, causing it to overheat.

Bulb Guard

Your LitePro is equipped with a lamp life detection system called Bulb Guard. When the operating lamp is near the end of its life or has become degraded, Bulb Guard causes the lamp to blink. When this happens, switch to the spare lamp. After you have finished your presentation and the LitePro has cooled, replace the old lamp with a new one.

Replacing Batteries in the Remote Control

Follow these steps to replace the batteries.

1. Turn the remote face down in your hand.

2. Slide the battery cover off in the direction shown below.

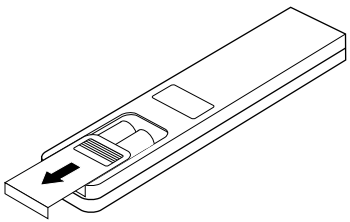

Figure 20. Removing the Battery Cover

3. Remove the old batteries.

4. Install two new AAA alkaline batteries as shown in Figure 21.

5. Replace the battery cover.

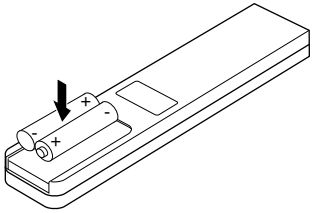

Figure 21. Installing New Batteries

Replacing the Fuse

A power line surge or spike can blow the power supply fuse, causing the LitePro to stop working. If this happens, you'll need to replace the fuse.

Caution

Use only the specified power supply fuse. Using a different fuse may damage the LitePro.

The correct fuse depends on the power line voltage in the country where you are operating the LitePro.

- If your line voltage is 220V to 240V (as in most European countries), use a 6.3 amp, 250V, 5x20 mm fuse.
- If your line voltage is 100V to 120V (as in Japan, the United States and most North American countries), use a 10 amp, 250V, 3AB fuse.

Caution

A surge-protected power strip is recommended if power surges are common in your area.

Follow these steps to replace the fuse.

1. Make sure that the condition that caused the fuse to blow no longer exists.
2. Turn off the LitePro by pressing the "O" side of the power switch on the side of the LitePro.
3. Unplug the power cord from the LitePro.

4. Locate the fuse holder on the side of the LitePro between the power switch and the power cord connector as shown below.

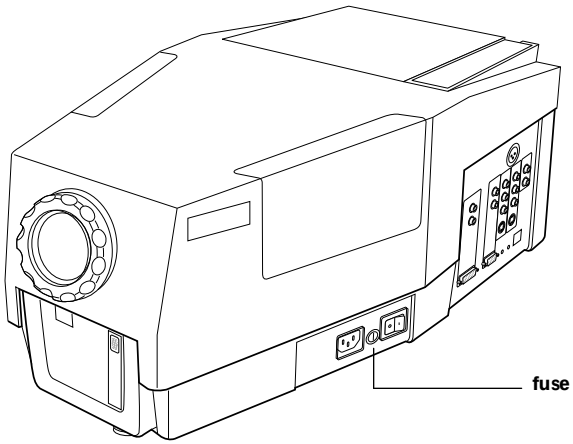

Figure 22. Locating the Fuse

5. Using a small coin or a flat blade screwdriver, turn the fuse holder a quarter turn in the clockwise direction.
6. Pull the fuse holder out of the LitePro as shown in Figure 23.
7. Remove the blown fuse from the fuse holder.
8. Push the new fuse into the clips of the holder until it is securely seated as shown in Figure 24.
9. Place the fuse holder back in the LitePro.
10. Using the same tool you used in step 5, turn the fuse holder a quarter turn counter-clockwise.
11. Plug the power cord back in.
12. Press the "|" side of the power switch to turn the LitePro back on.

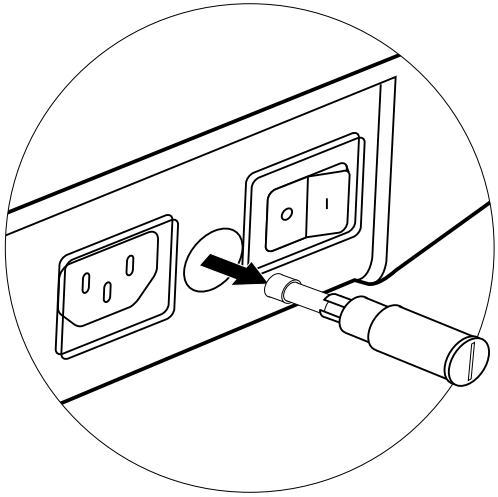

Figure 23. Removing the Fuse Holder

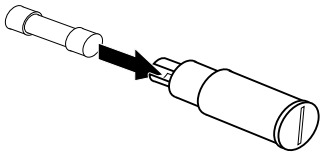

Figure 24. Inserting the New Fuse into the Fuse Holder

Troubleshooting

Warning

Do not open the LitePro case!
Opening the case may cause electric shock!
Except for the projection lamps, there are no user-serviceable parts inside. If you are having problems with your LitePro, read through this section of this manual. Call In Focus Technical Support if necessary. They will refer you to an In Focus Authorized Service Provider.

Before You Call for Assistance

Before calling your dealer for assistance, follow these steps in this order to make sure everything is properly connected.

1. Make sure you connected the LitePro to you equipment as described in "Setting Up the LitePro" starting on page 5.
2. Check cable connections. Verify that all computer and power cables are properly connected.
3. Verify that all power is switched on.
4. Verify that you have pushed the STANDBY button on the remote.
5. If the LitePro still does not display an image, reboot the computer. (Macintosh computers require a specific power-up sequence: the LitePro must be turned on before you turn on the computer.)
6. If the image is still bad, unplug the LitePro from the computer and check the computer monitor's display. The problem may be with your graphics controller rather than with the LitePro. (When you re-connect the LitePro, remember to turn the computer and monitor off before you power up the LitePro. Power the equipment back up in this order: LitePro, monitor, computer.)
7. If the problem still exists, read through the problems and solutions in this chapter.

If you call In Focus for assistance:

- Display the menu (press the **menu** button on the remote). Write down the information that is displayed on the left side of the menu. (Refer to page 25 if you want to know more about these values.)
- Find out what kind of graphics controller card is installed in your computer. (This is the circuit board inside your computer to which the LitePro is connected. Most newer PCs use a VGA graphics controller.)

Solutions to Common Problems

Problem: Nothing on screen

- Is the projector switched on? The "|" side of the power switch should be pressed. Refer to the figures on pages 7 through 10 for the location of the power switch.
- Is the LitePro properly plugged into a live AC outlet?
- If your Lite Pro is plugged into a power strip, is the power strip turned on?
- Is the lens cap still on the projection lens at the front of the projector?
- Are the lamps installed? Refer to "Replacing the Projection Lamps" on page 40 or the Read Me First card for installation instructions.
- Is the bulb burned out? If the bulb is burned out, you can switch to the spare. Refer to "Switching to the Spare Lamp" on page 19.
- Has the projector's fuse blown? Refer to "Replacing the Fuse" on page 43 for more information.
- Is the LitePro adjusted properly? Adjust the brightness. Refer to "Brightness" on page 26 for more information.
- Does the cable have bent pins in any of the connectors? Check the pins on all three ends of the LitePro cable. Check the power cord for bent pins also.

Problem: Color or VGA text not being projected

- The brightness control may need to be adjusted. Adjust the brightness up or down until the text is visible. Refer to "Brightness" on page 26 for more information.

Problem: Image is not centered on the screen

- Use the arrow buttons on the remote to center the image. (The menu must be off when you re-position the image. When the menu is displayed, the arrow buttons have a different function.) Refer to “arrow buttons” on page 21 for more information.

Problem: Only the test pattern is displayed

- Are your cables connected correctly? Check to see that the cable is connected to the graphics port on the computer (this is the connector where your monitor cable usually goes).
- Did you turn on the equipment in the correct order? You may need to repeat the power up sequence. The equipment must be powered on in this order: LitePro, computer monitor, computer. It is especially important that this sequence be followed for Macintosh computers.
- Is your computer graphics system set up correctly? Is your computer’s graphics board turned on?

Problem: Image is too wide or narrow for screen

- You may need to adjust the tracking to reduce or enlarge the projected image. Refer to “Tracking” on page 33 for more information.
- You may need to adjust the resolution of your monitor if it is greater than 800x600 pixels. Otherwise, your presentation display may appear overly compressed.

Problem: Image is out of focus

- Turn the projection lens to focus the image.
- The projection screen must be at least 4 feet (1.2m) from the LitePro.
- The projection lens may need cleaning.

Problem: Remote not operating correctly

- You may need to replace the batteries in the remote. Refer to “Replacing Batteries in the Remote Control” on page 42 for instructions.

Problem: Image and menus are reversed left to right

- Rear projection mode is probably set. To switch back to forward projection:
  1. Press the **menu** button to display Menu 1.
  2. Use the right or left arrow buttons to highlight “Menu 2”.
  3. Press **select/enter** to display Menu 2.
  4. Use the right or left arrow buttons to highlight “Rear Projection”.
  5. Press **select/enter** to enable Rear Projection. The image immediately changes to display the mirror image. (Press **select/enter** again to change it back.)
  6. Press **menu** again to remove the menu.

Problem: LitePro displays vertical lines, “bleeding” or spots

- Adjust the tracking. Refer to “Tracking” on page 33 for more information.
- The projection lens may need cleaning.

Problem: Image is “noisy” or streaked

- Adjust the sharpness. Refer to “Sharpness” on page 35 for more information.
- Adjust the sync. Refer to “Sync” on page 27 for more information.

Problem: Projected colors don’t match the monitor’s colors

- Adjust the brightness. Remember that, just as there are differences in the displays of different monitors, there are often differences between the computer image and the projected image. Refer to “Brightness” on page 26 for more information.

Problem: “EEPROM Failed” displays on the menu

- One of the integrated circuits inside the LitePro has failed. The only functionality that is lost is that the LitePro will reset the menu functions to their factory defaults when you turn it off. Call In Focus Technical Support; refer to “If You Need Assistance” on page 3.

Appendix

Specifications

Projection Lamps	
Type	tungsten halogen EVD bulb, 400 watt, 36 volt
Life	Average 50 hours each

Fuse	
100 to 120V nominal line	10A, 250V, 3AB
220 to 240V nominal line	6.3A, 250V, 5x20mm

Input Power Requirements
100 to 240 VAC, 7.2A to 2500 mA, 50 to 60 Hz.

Remote Control	
Battery	Two (2) AAA alkaline cells
Range	25 feet (7.62m) when reflected off a white wall or projection screen within 45° of the projection axis

Optical	
Brightness	peak performance 300 lumens (measured by ANSI 9 point method) typical performance 285 lumens (9 point)
Uniformity	1.9:1 maximum (12 point)
Projection Range	5 to 15 feet (1.5 to 4.6 m)

Temperature	
Operating	Nominal 25°C *
Non-operating	0° to 60°C

Altitude	
Operating	0 to 10,000 feet (3048 meters)
Non-operating	20,000 feet (6096 meters)

Humidity	
Operating and non-operating	10 to 90% RH, non-condensing

Dimensions	
LitePro 560/570	20 x 11.5 x 8 inches (51 x 29 x 20 cm)

Weight	
Unpacked	20 lbs. (8.8 kg)
As shipped	30 lbs (12.7 kg)

* Maximum operating temperature depends on altitude.
At 8,000 ft, the maximum temperature is 31°C.
At 9,000 ft (2743m), the maximum temperature is 30°C.
At 10,000 ft (3048m), the maximum temperature is 29°C.

Accessories

Contact your In Focus dealer to order. Refer to the In Focus Accessories Catalog for additional items.

Item	Part Number
Read Me First card	009-0124-xx
LitePro 560/570 User's Guide	010-0060-xx
LiteShow II User's Guide	010-0061-xx
Soft Carry Case	110-0079-xx
Shipping Box	110-0080-xx
ATA-Approved Hard Carry Case	591-0169-xx
LitePro (VGA) Cable	210-0014-xx
North American Power Cord	210-0023-xx
Australian Power Cord	210-0027-xx
UK Power Cord	210-0028-xx
European Power Cord	210-0029-xx
Danish Power Cord	210-0030-xx
Swiss Power Cord	210-0031-xx
Projection Lamps, 36V, 400W (set of 2)	232-0020-xx
Lens Cover	340-0148-xx
Mac Adapters (set of 2)	516-0003-xx
Remote Control Programmer User's Guide	010-0083-xx
Remote Control Programmer Software	599-0064-xx
Remote Control Programmer (RS-232) Cable	210-0055-xx
Remote Control Programmer (RS-232) Adapter	515-0025-xx
RCA jack-to-mini plug adapter	515-0034-xx
Remote Control	590-0095-xx
LitePro Ceiling Mount Kit	591-0098-xx
LiteShow Demo Disk	599-0063-xx
LiteShow System Disk	599-0062-xx
Fuse, 10A, 3AB (use w/110V)	749-0013-xx
Fuse Holder for 10A, 3AB Fuse (use w/110V)	749-0014-xx
Fuse, 6.3A, 5x20mm (use w/220V)	749-0010-xx
Fuse Holder for 6.3A, 5x20mm Fuse (use w/220V)	749-0011-xx

Cable Connector Pin Assignments

The Y-shaped LitePro cable that shipped with your LitePro has three connectors, they are labeled “Monitor”, “Computer” and “LCD.” The pin assignments for these connectors are listed here.

“LCD” Connector

The end of the LitePro cable that plugs into the LitePro itself is a male 26-pin D-style connector. The table below lists its pin assignments.

Input Pin	Signal Description	Output Pin
1	Vertical sync	10
2	Horizontal sync	11
8	Blue analog	14
6	reserved	12
7	reserved	13
9	Red analog	15
16	reserved	3
17	reserved	4
18	Green analog	5
20	GND	
21	GND	
22	GND	
23	Digital/analog video cable ID	
24	GND	
25	VGA/no video cable ID pin	

"Monitor" and "VGA" Connectors

The pin assignments are the same for the "Monitor" and "VGA" connectors. The "Monitor" connector is a female video RGB, 15-pin micro-D-style connector. The "VGA" connector is a male video RGB, 15-pin micro-D-style connector. The table below lists the pin assignments for both connectors.

Pin	Signal Description
1	Red analog input
2	Green analog input with composite sync
3	Blue analog input
4	GND
5	GND
6	Red GND
7	Green GND
8	Blue GND
9	NC
10	Sync GND
11	GND
12	NC
13	Horizontal sync/composite sync input
14	Vertical sync input
15	NC

Laptop Display Activation Chart

The LitePro 560/570 connects to a laptop computer through the computer's external monitor port. Most laptop computers do not automatically activate their external monitor port when a device such as the LitePro is connected. The following chart lists the commands that activate the external monitor port for a variety of computers. If your computer is not listed here, refer to your computer's documentation.

Computer	Key command to activate port	Key command to de-activate port
Acer	Ctrl-Alt-Esc (for setup)<	Ctrl-Alt-Esc (for setup)
AST	FN-D or Ctrl-D Ctrl-FN-D FN-F5 type from A:/IVGA/CRT	FN-D or Ctrl-D Ctrl-FN-D FN-F5 type from A:/IVGA/CRT
Austin	Ctrl-Alt-,	Ctrl-Alt-,
Altima*	Shift-Ctrl-Alt-C setup VGA/Conf.Simulscan	Shift-Ctrl-Alt-L setup VGA/Conf.Simulscan
Amrel* **	setup menu Shift-Ctrl-D	setup menu Shift-Ctrl-D
Apple	see Mac Portable and Mac PowerBook	
BCC	automatic - no activation command needed	reboot computer
Bondwell	LCD or CRT option	LCD or CRT option
Chaplet**	setup screen	setup screen
Commax	Ctrl-Alt-#6	Ctrl-Alt-#5
Compaq**	Ctrl-Alt-< FN-F4	Ctrl-Alt->>>>FN-F4
Data General	Ctrl-Alt-Command	Ctrl-Alt-Command
Data General Walkabout	2 CRT/X at DOS prompt	reboot
Datavue	Ctrl-Shift-M	Ctrl-Shift-M
Dell*	Ctrl-Alt-< Ctrl-Alt-F10	Ctrl-Alt->>>>Ctrl-Alt-F10
Digital	automatic FN-F2	reboot FN-F2
Dolch	dip switch to CRT	dip switch to LCD
Epson	dip switch to CRT	dip switch to LCD

Computer	Key command to activate port	Key command to de-activate port
Everex**	setup screen option	setup screen option
For-A	Ctrl-Alt-Shift-C	Ctrl-Shift-Alt-L
Gateway 2000	FN-F1	FN-F1
Grid* **	FN-F2, choose auto or simultaneous	FN-F2
	Ctrl-Alt-Tab	Ctrl-Alt-Tab
Hyundai	setup screen option	setup screen option
IBM 970	automatic	warm reboot
IBM ThinkPad	setup screen option	setup screen option
Kris Tech**	FN-F8	FN-F8
Mac Portable	no video port: not compatible	
Mac PowerBook		
140, 145, 170	no video port: requires a 3rd-party interface	
160, 165, 180, 250	automatic: use Set Mirroring option	warm reboot
230	requires Apple Docking Station	
Mastersport	FN-F2	FN-F1
Micro Express	automatic	warm reboot
Microslave	automatic	warm reboot
Mitsubishi	SW2 On-Off-Off-Off	SW2 Off-On-On-On
NCR	setup screen option	setup screen option
NEC*	setup screen option	setup screen option
	CRT at the DOS prompt	LCD at the DOS prompt
Packard Bell*	FN-F2	FN-F2
	Ctrl-Alt-<	Ctrl-Alt->
Panasonic	FN-F2	FN-F2
Samsung	setup screen option	setup screen option
Sanyo	setup screen option	setup screen option
Sharp	dip switch to CRT	dip switch to LCD
SPARC-Dataview	Ctrl-Shift-M	Ctrl-Shift-M
Tandy* **	Ctrl-Alt-Insert	Ctrl-Alt-Insert
	setup screen option	setup screen option
Texas Instruments	setup screen option	setup screen option
Top-Link* **	setup screen option	setup screen option
	FN-F6	FN-F6
Toshiba* **	Ctrl-Alt-End	Ctrl-Alt-Home
	FN-End	FN-Home

Computer	Key command to activate port	Key command to de-activate port
4500	FN-F5 setup screen option	FN-F5 setup screen option
Wyse	software driver	software driver
Zenith	FN-F10	FN-F10

* *These manufacturers have other models that automatically send video to the external CRT port when some type of display device is attached.*

** *These manufacturers offer more than one activation command depending on the computer model.*

Index

A

accessories 53
activation commands for laptop computers 9, 56
adapters
  connecting to Macintosh 8, 9
  Macintosh 2, 8, 9
  ordering spares 53
  shipped with projector 2
air movement inside unit 3
altitude limits 52
amplified external speaker 14
Apple, *see Macintosh*
arrow buttons
  using in menu 21
assistance, *see Technical Support*
audio
  adjusting balance 37
  adjusting bass 37
  adjusting treble 37
  adjusting volume 22, 36
  enabling loudness 23, 32, 38
  muting 23, 38
audio lock 36
Audio Menu 25
Audio Out connector 14
audio/video cable
  attaching 11
  ordering 53
auto standby, setting 29

B

balance, adjusting 37
bass, adjusting 37
batteries, replacing in remote control 42
black screen 32
blank screen 32
brightness, adjusting 26
Bulb Guard 42
bulb, *see lamp*

C

cables
  audio/video 11
  LitePro cable 2, 6, 7, 53
  ordering 53
  pin assignments for LitePro cable 54, 55
  power cable 2, 15, 53
  shipped with projector 2
case, ordering 53
ceiling mount kit, ordering 53
CGA graphics 2
clear screen 32
colors
  don't match monitor colors 50
  maximum number available 1
  not displayed 48
  selecting number of 31
Comp. (menu function) 35
compatibility 2
compressed image 2, 7
compressing PAL video 35
computers
  compatible with LitePro 2
  connecting sound board 11
  selecting 31
connectors
  audio out 14
  composite 11
  computer 6
  microphone 15
  monitor 8
  RGBHV 10
  serial 32
  source (1 - 4) 11
  S-Video 9

D

defaults, resetting 26, 30
display positioning 27

E

edges appear “comb-like” 35
EEPROM failed 24, 50
EGA graphics 2

F

fade between internal and external speakers 37
focusing the image 18
freeze/esc button 22
fuse
  ordering spares 53
  replacing in LitePro 43
  specifications 51
fuzzy lines 33

H

height of LitePro 18
humidity limits 52

I

IBM-compatible computers
  compatibility 2
  connecting 9
image
  adjusting tint 26
  blinks 42
  colors don’t match monitor’s colors 50
  compressed 2, 7
  flashes off and on 42
  focusing 18
  fuzzy lines 33
  has lines or spots 50
  not centered 49
  not displayed 48
  out of focus 18, 49
  PAL video image doesn’t fit 35
  re-positioning 27
  resolution 2, 7
  reversed 28, 50
  streaked 50
  switch between computer and video 21
  too wide or too narrow 49

K

keypad, using to display menu 1 24

L

lamp
  average life 19, 51
  BulbGuard 42
  flashing off and on 42
  handling 40
  life detection system 42
  ordering spares 53
  replacing the lamps 40
  specifications 51
Language (menu function) 33
language, selecting for menus 33
laptop computers
  activation sequence to allow secondary display 56
  Apple PowerBook 10
  compatibility 2
  connecting 9
  IBM-compatible 9
laser disc player
  connecting 11
  selecting 21
LCD, description 1
LEFT/RIGHT position box 27
lens cover 53
lite show button 22
LitePro
  accessories 53
  adjusting the height 18
  displaying menu 20
  not working 48
  operating limits 52
  positioning 5
  replacing batteries in the remote 42
  replacing fuse 43
  replacing lamps 40
  specifications 51
LitePro cable
  attaching Mac adapters 8
  connecting to monitor 7
  description 2
  ordering spares 53
  pin assignments 54, 55
LiteShow, ordering 53
loudness, enabling 23, 32, 38
LS Grab 23, 32

M

Macintosh
- adapters 2
- Classic 2
- compatibility 2
- connecting 8
- connecting adapters 8
- connecting PowerBook 10
- Performa 2
- PowerBook 2, 10
- PowerBook Duo 10
- Quadra 2
- *see also* computers
- video-out cable 10

MCGA graphics 2
Menu 1 24
Menu 2 24
menu button 20, 26
menus
- change language of 33
- displaying menu 1 24
- displaying menu 2 24, 25
- resetting to defaults 30
- using the menus 24

mic button 22
microphone 23
monitor
- connecting 7–10
- projected colors don't match 50
- resolution 2, 7

mute button 22
muting the audio 38

N

next button 21
NTSC video type 34

O

optical specifications 51

P

PAL video type 34, 35
Palette (menu function) 31
PC, *see IBM-compatible computers*
Performa, *see Macintosh*
pin assignments for LitePro cable 54, 55
Pixel Slice 34
positioning the image 27
power cable
- connecting to LitePro 15
- ordering spares 53

power supply specifications 51
power switch 17
PowerBook, *see Macintosh*
prev button 22
prog button 23, 32
Program (menu function) 32

Q

Quadra, *see Macintosh*

R

raise the LitePro 18
Rear Project (menu function) 28
remote control
- description of buttons 20
- not working 49
- ordering spares 53
- programming the **prog** button 23
- range 17
- replacing batteries 42
- specifications 51
- using to display primary menu 24
- using to turn bulb on and off 17

Remote Control Programmer
- ordering 53
- using 29, 32

remove image from screen 32
Reset (menu function) 30
resetting menu adjustments 26, 30
resolution of computer monitor 2, 7
RS-232
- assigning to **prog** button 32
- description 32
- enabling the port 29

S

SECAM video type 34
select/enter button 21
sharpness, adjusting 35
shipping contents 1
source enable 31
source prompt, displaying 28
speaker
    amplified 14
    balance 37
    external 14, 38
    fade 38
    internal 38
specifications 51
standby button 17, 23
switching to spare lamp 19
sync, adjusting 27, 32

T

Technical Support
    diagnostic information 25
    in Europe 3
    in USA 3
    information to have on hand before you call 48
    things to try before you call 47
temperature limits 52
test pattern
    description 29
    displaying 21, 29
    menu function 29
    won't go away 49
Text Mode (menu function) 34
text not visible 48
tint, adjusting 26
Tracking (menu function) 33
tracking, adjusting 33
treble, adjusting 37
troubleshooting 47

U

UP/DOWN position box 27

V

VCR
    connecting 11
    displaying (selecting) 21
vertical lines displayed 33, 50
VGA cable, see *LitePro cable*
VGA graphics 2
video sources, selecting 31
Video Type (menu function) 34
video-out cable 10
volume button 22
volume, adjusting 36

LIMITED WARRANTY

In Focus Systems Inc. (“In Focus”) warrants that each LitePro 560 and LitePro 570 (“the Product”) sold hereunder will conform to and function in accordance with the written specifications of In Focus. Said limited warranty shall apply only to the first person or entity that purchases the Product for personal or business use and not for the purpose of distribution or resale. Said warranty shall continue for a period of one (1) year from the date of such purchase. In Focus does not warrant that the Product will meet the specific requirements of the first person or entity that purchases the Product for personal or business use. In Focus’ liability for the breach of the foregoing limited warranty is limited to the repair or replacement of the Product or refund of the purchase price of the Product, at In Focus’ sole option. To exercise the Purchaser’s rights under the foregoing warranty, the Product must be returned at the Purchaser’s sole cost and expense, to In Focus or to any authorized In Focus service center provided, however, that the Product must be accompanied by a written letter explaining the problem and which includes (i) proof of date of purchase; (ii) the dealer’s name; and (iii) the model and serial number of the Product. A return authorization number, issued by the In Focus customer service department, must also be clearly displayed on the outside of the shipping carton containing the Product.

WARRANTY LIMITATION AND EXCLUSION

In Focus shall have no further obligation under the foregoing limited warranty if the Product has been damaged due to abuse, misuse, neglect, accident, unusual physical or electrical stress, unauthorized modifications, tampering, alterations, or service other than by In Focus or its authorized agents, causes other than from ordinary use or failure to properly use the Product in the application for which said Product is intended.

DISCLAIMER OR UNSTATED WARRANTIES

THE WARRANTY PRINTED ABOVE IS THE ONLY WARRANTY APPLICABLE TO THIS PURCHASE. ALL OTHER WARRANTIES, EXPRESS OR IMPLIED, INCLUDING, BUT NOT LIMITED TO, THE IMPLIED WARRANTIES OF MERCHANTABILITY AND FITNESS FOR A PARTICULAR PURPOSE ARE DISCLAIMED. THERE ARE NO WARRANTIES THAT EXTEND BEYOND THE FACE HEREOF AND THE FOREGOING WARRANTY SHALL NOT BE EXTENDED, ALTERED OR VARIED EXCEPT BY WRITTEN INSTRUMENT SIGNED BY IN FOCUS.

LIMITATION OF LIABILITY

IT IS UNDERSTOOD AND AGREED THAT IN FOCUS’ LIABILITY WHETHER IN CONTRACT, IN TORT, UNDER ANY WARRANTY, IN NEGLIGENCE OR OTHERWISE SHALL NOT EXCEED THE RETURN OF THE AMOUNT OF THE PURCHASE PRICE PAID BY PURCHASER AND UNDER NO CIRCUMSTANCES SHALL IN FOCUS BE LIABLE FOR SPECIAL, INDIRECT OR CONSEQUENTIAL DAMAGES. THE PRICE STATED FOR THE PRODUCT IS A CONSIDERATION IN LIMITING IN FOCUS’ LIABILITY. NO ACTION, REGARDLESS OF FORM, ARISING OUT OF THE AGREEMENT TO PURCHASE THE PRODUCT MAY BE BROUGHT BY PURCHASER MORE THAN ONE YEAR AFTER THE CAUSE OF ACTION HAS ACCRUED.

27700B SW Parkway Avenue
Wilsonville, Oregon 97070-9215
USA
1-800-294-6400

Planetenweg 91
NL-2132 HL
Hoofddorp, The Netherlands
31 (0) 2503-23200

printed on recycled paper